SENCOR®

SFH 7020WH
SFH 7021BK

EN

HOT AIR FAN HEATER

Translation of the original manual

This product is only suitable for well-insulated areas or occasional use! This product is not suitable as a main heat source for the purpose of heating. Information regarding electric local space heaters as required by EU Commission Regulation 2015/1188 is provided in the Annex to this manual.

SENCOR®

SFH 7020WH
SFH 7021BK



A

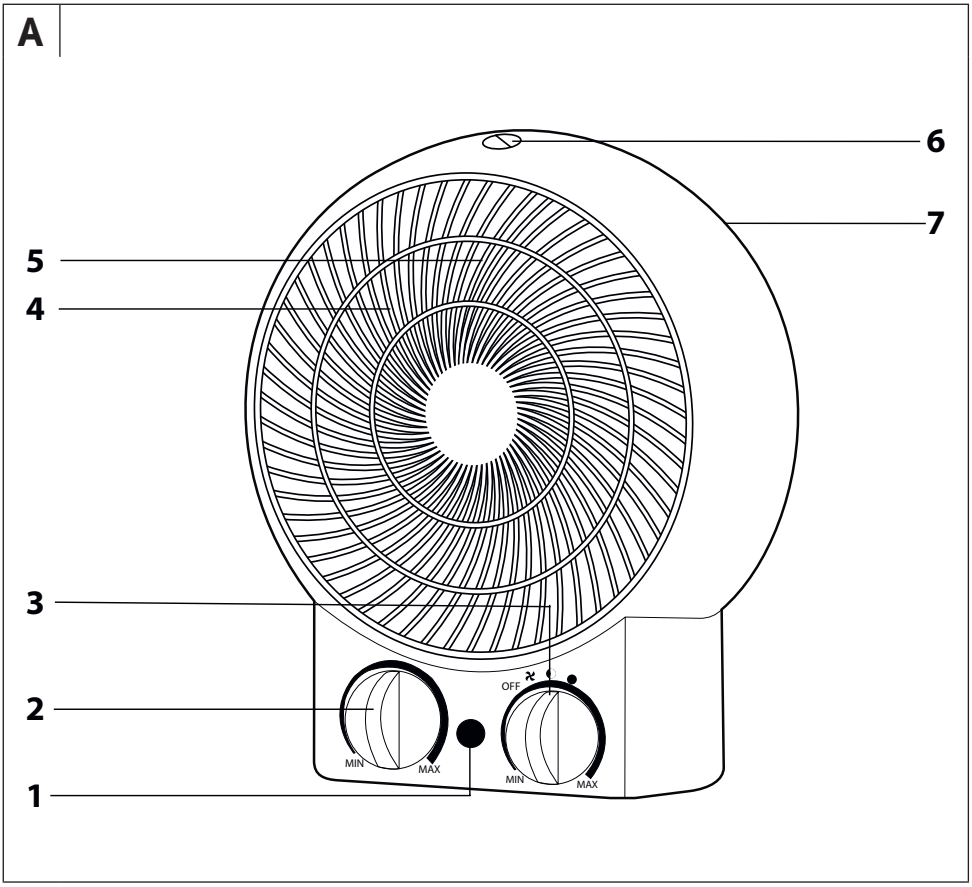

EN Hot Air Fan Heater

Important Safety Instructions

READ CAREFULLY AND STORE FOR FUTURE USE.

- This appliance may be used by children 8 years of age and older and by persons with physical, sensory or mental impairments or by inexperienced persons, if they are properly supervised or have been informed about how to use of the product in a safe manner and understand the potential dangers.
- Children must not play with the appliance. Cleaning and maintenance performed by the user must not be performed by unsupervised children.
- If the power cord is damaged, it must be replaced by the manufacturer, their service technician or by a similarly qualified person to prevent the occurrence of a dangerous situation.
- Children younger than 3 years of age should be prevented from accessing the appliance unless they are under constant supervision.
- Children between the ages of 3 and 8 may only turn this appliance on/off if it has been placed or installed in its intended normal operating position and if they are supervised or have been instructed in the safe use of the appliance and understand the potential hazards. Children between the ages of 3 and 8 must not insert the plug into

Copyright © 2025, Fast ČR, a.s.

the socket, regulate or clean the appliance or carry out maintenance by the user.



CAUTION:
Certain parts of this product may become very hot and cause burns. Special attention should be paid when children and handicapped people are present.



WARNING:
Do not cover. To prevent overheating, do not cover the heater.

- The heater must not be located just below the power socket.
- Do not use this heater with a program, timer, remote control system or any other component that switches the heater on automatically as there is a risk of fire if the heater is covered or improperly positioned.
- Do not use the appliance in the near vicinity of a bath, shower or swimming pool.
- Do not use the appliance if it has fallen.
- Do not use the appliance if there are visible signs of damage.
- Use the appliance on a stable and horizontal surface only. This heater is not designed to be mounted on a wall.

Copyright © 2025, Fast ČR, a.s.



WARNING:

Do not use the appliance in small rooms if they are occupied by persons who are unable to leave the room on their own, unless permanent supervision is provided.



WARNING:

To reduce the risk of fire, keep textiles, curtains or any other flammable material at a distance of at least 1m from the air outlet.

- Before connecting the appliance to a power socket, check that the nominal voltage on the appliance's rating label matches the electrical voltage in the socket.
- Do not connect the appliance to an extension cord or two way adapter.
- The appliance is designed for use in households, offices and similar types of areas.
- Do not use the appliance in very dusty or humid rooms such as laundries or bathrooms, in areas where chemicals are stored, in industrial surroundings or outdoors.
- Do not use the appliance in the near vicinity of a bath, shower or swimming pool.
- Do not place the appliance on unstable surfaces such as carpets with very long and thick fibres. The appliance must be located on a stable and even surface.
- Free space of at least 100 cm in front of the appliance and 50 cm behind the appliance must be maintained while it is running to ensure sufficient air circulation.
- Never insert any objects through the front grill for the outflow of air or the back grill for the inflow of air. A electrical short circuit could occur, a fire might be started or the appliance may be damaged.
- Do not subject people or animals to the direct flow of hot or cold air for an extended period of time. It may negatively affect their health.
- To avoid potential injury by electric shock do not submerge any part of this appliance in water or any other liquid and do not touch the appliance with damp or wet hands.
- Always turn the appliance off and disconnect it from the power socket if it's to be left unused or before cleaning.
- Do not leave the appliance running while you sleep.
- When cleaning the appliance, do not submerge it in water or wipe it with a wet cloth.
- To avoid damaging the power cord, do not excessively bend or twist it.
- Ensure that the power cord does not come into contact with hot surfaces or sharp objects.
- Do not disconnect the appliance from the power socket by pulling on the power cord. This could damage the power cord or the power socket.
- Disconnect the cord from the power socket by gently pulling the plug of the power cord.
- Do not use the appliance if it is not working correctly, if it has been damaged or has been submerged in water. To avoid the danger of injury by electrical shock, do not repair or modify the appliance yourself. Have all repairs or adjustments of the appliance performed at an authorised service centre. By tampering with the appliance you risk voiding your legal rights arising from unsatisfactory performance or quality warranty. The manufacturer is not responsible for any damages caused by the incorrect use of this appliance.

Copyright © 2025, Fast ČR, a.s.

EN Hot Air Fan Heater
User's manual

- Thank you for purchasing a SENCOR brand product and we hope that you will be happy with it.
- Prior to using this appliance, please read the user's manual thoroughly, even in cases, when one has already familiarised themselves with previous use of similar types of appliances. Only use the appliance in the manner described in this user's manual. Keep this user's manual in a safe place where it can be easily retrieved for future use.
- We recommend saving the original cardboard box, packaging material, purchase receipt and responsibility statement of the vendor or warranty card for at least the duration of the legal liability for unsatisfactory performance or quality. In the event of transportation, we recommend that you pack the appliance in the original box from the manufacturer.

DESCRIPTION OF THE APPLIANCE

A1 Power indicator light
A2 Temperature control knob
A3 Turn switch for starting just the fan, for setting the power level I or II and for turning off the appliance.
A4 Air outlet grill
A5 Fan and heating elements
These parts are hidden underneath the grill.
A6 Integrated carry handle (not shown) it is located at the rear of the appliance.
A7 Air inlet grill (not shown) it is located at the rear of the appliance.

OPERATING THE APPLIANCE

- Before first use, remove all packaging materials including promotional stickers and labels from the appliance.
- Locate the appliance in a suitable location in accordance with the safety instructions. Make sure that the inflow or outflow vents **A7** or **A4** are not blocked, that the temperature control knob **A2** is set to minimum and the switch **A3** is in position 0 (off). Connect the appliance to a power socket. After connecting the appliance to a power socket, indicator light **A1** will be lit.

1. SETTING AN OPERATING MODE

- Set the temperature control knob **A2** to maximum and select the desired operating mode using switch **A3**.

Setting switch A3	Description of operating mode
0	Off
	Air ventilation without heating. Only the fan is running. Heating elements are turned off.
I	Power is set to a low level (1 200 W). The fan and one of the two heating elements are running. The heating element heats the air and the fan ensures its flow into the room.
II	Power is set to a high level (2 000 W). The fan and both the heating elements are running. The heating elements heat the air and the fan ensures its flow into the room.



Note:
Upon first use or after it has not been used for an extended period of time, a slight odour may be sensed from the appliance. This is completely normal and will quickly disappear.

2. TEMPERATURE CONTROL KNOB SETTING

- The appliance is equipped with a thermostat that serves to maintain the desired temperature in the room.
- To heat up the air in the room as fast as possible, set switch **A3** to the high power level and the temperature control knob **A2** to maximum. When the desired temperature has been reached, slowly turn the temperature control knob **A2** anticlockwise until you hear a click. The set thermostat will automatically switch the heating elements **A5** on and off to maintain the desired temperature.

3. TURNING OFF

- When you have finished using it, set the temperature control knob **A2** to minimum, set switch **A3** to position 0 (off) and disconnect the power cord from the power socket.
  After disconnecting the appliance from the power socket, indicator light **A1** will turn off. Allow the appliance to cool down.

AUTOMATIC SHUT-OFF FUNCTION

- The appliance is equipped with a safety mechanism that automatically turns it off when it is accidentally knocked over. After returning the appliance back to the operating position, it will start running again.

THERMAL PROTECTION

- The appliance is equipped with a thermal fuse that turns it off upon overheating. Should such a situation occur, turn the appliance off and disconnect it from the power socket. Make sure that the air inlet and outlet openings **A7** or **A4** are not blocked. Allow the appliance to cool down before attempting to put it back into operation as this will give the thermal fuse time to reset.
- If you are unable to put the appliance back into operation, contact an authorised service centre.

CLEANING AND MAINTENANCE

- Before cleaning it, make sure that the appliance is turned off and disconnected from the power socket. If the surface of the appliance is hot, allow it to cool down.
- Use a dry or lightly dampened wiping cloth to clean the surface of the appliance. Then thoroughly wipe everything dry. Dust that has settled inside the appliance can be vacuumed out using a vacuum cleaner through the air inlet and outlet grills **A7** and **A4**.
- For cleaning, do not use cleaning products with an abrasive effect, solvents, etc. Otherwise, outer surface of the appliance may be damaged. Do not submerge the appliance or its power cord in water or any other liquids.

TECHNICAL SPECIFICATIONS

Rated voltage range ..... 220–240 V~
Rated frequency ..... 50 Hz
Rated power ..... 2 000 W
Power input settings ..... 1200 W / 2 000 W
Electrical shock protection class II
Noise level ..... 55 dB(A)

The declared noise emission level is 55 dB(A), which represents a level A of sound power with respect to a reference sound power of 1 pW.

We reserve the right to change text and technical specifications.

Copyright © 2025, Fast ČR, a.s.

Revision 01/2025

Explanation of technical terminology



Safety class for electrical shock protection:
Class II – Electrical shock protection is provided by double or heavy-duty insulation.

Changes to text and technical parameters are reserved.

INSTRUCTIONS AND INFORMATION REGARDING THE DISPOSAL OF USED PACKAGING MATERIALS

Dispose of used packaging material at a site designated for waste in your municipality.

DISPOSAL OF USED ELECTRICAL AND ELECTRONIC EQUIPMENT



This symbol on products or original documents means that used electric or electronic products must not be added to ordinary municipal waste. For proper disposal, renewal and recycling, hand these products over to determined collection points. Alternatively, in some European Union states or other European countries you may return your products to the local retailer when buying an equivalent new product. Correct disposal of this product helps save valuable natural resources and prevents potential negative effects on the environment and human health, which could result from improper waste disposal. Ask your local authorities or collection facility for more details. In accordance with national regulations penalties may be imposed for the incorrect disposal of this type of waste.

For business entities in European Union states

If you want to dispose of electrical or electronic equipment, ask your retailer or supplier for the necessary information.

Disposal in other countries outside the European Union.

This symbol is valid in the European Union. If you wish to dispose of this product, request the necessary information about the correct disposal method from the local council or from your retailer.



This product meets all the basic requirements of EU directives related to it.

EN ▪ Attachment to the user's manual for the following product:
CZ ▪ Příloha k návodu k obsluze k níže uvedenému výrobku:
SK ▪ Príloha k návodu na použitie pre nasledovný prístroj:
HU ▪ Az alább feltüntetett termék használati útmutatójának a melléklete:
PL ▪ Aneks do instrukcji obsługi dla poniżej podanego wyrobu:
LT ▪ Toliau aprašyto gaminio naudojimo instrukcijos priedas:
HR ▪ Dodatak korisničkom priručniku za dolje opisani proizvod:
GR ▪ Συνημμένο αρχείο του παρόντος εγχειριδίου χρήσης για το προϊόν το οποίο περιγράφεται παρακάτω:

SFH 7020WH / SFH 7021BK

EN ▪ Information requirements for electric local space heaters
CZ ▪ Požadavky na informace týkající se elektrických lokálních topidel
SK ▪ Požiadavky na informácie pre elektrické lokálne ohrievače priestoru
HU ▪ Az elektromos egyedi helyiségfűtő berendezések termékinformációs követelményei
PL ▪ Wymogi w zakresie informacji dotyczące elektrycznych miejscowych ogrzewaczy pomieszczeń
LT ▪ Informacijos apie elektrinius vietinius patalpų šildytuvus reikalavimai
HR ▪ Zahtjevi za informacije za električne grijalice za lokalno grijanje prostora
GR ▪ Απαιτήσεις πληροφόρησης για ηλεκτρικούς τοπικούς θερμαντήρες χώρου

Copyright © 2025, Fast ČR, a.s.

Revision 01/2025

EN ▪ Model identifier: / CZ ▪ Identifikační značka modelu: / SK ▪ Identifikačný (-é) kód (-y) modelu: / HU ▪ Modellazonosító: / PL ▪ Identyfikator(-y) modelu: / LT ▪ Modelio žymuo (-enys): / HR ▪ Identifikacijska(-e) oznaka(-e) modela: / GR ▪ Αναγνωριστικό(-ά) μοντέλου:					**SFH 7020WH SFH 7021BK**
EN ▪ Item / CZ ▪ Údaj / SK ▪ Položka / HU ▪ Jellemző / PL ▪ Parametr / LT ▪ Parametras / HR ▪ Značajka / GR ▪ Χαρακτηριστικό	EN ▪ Symbol / CZ ▪ Značka / SK ▪ Symbol / HU ▪ Jel / PL ▪ Oznaczenie / LT ▪ Ženklas / HR ▪ Simbol / GR ▪ Σύμβολο	EN ▪ Value / CZ ▪ Hodnota / SK ▪ Hodnota / HU ▪ Érték / PL ▪ Wartość / LT ▪ Vertė / HR ▪ Vrijednost / GR ▪ Αριθμητική τιμή	EN ▪ Unit / CZ ▪ Jednotka / SK ▪ Jednotka / HU ▪ Mértékegység / PL ▪ Jednostka / LT ▪ Vienetas / HR ▪ Jedinica / GR ▪ Μονάδα	EN ▪ Item / CZ ▪ Údaj / SK ▪ Položka / HU ▪ Jellemző / PL ▪ Parametr / LT ▪ Parametras / HR ▪ Značajka / GR ▪ Χαρακτηριστικό	EN ▪ Unit / CZ ▪ Jednotka / SK ▪ Jednotka / HU ▪ Mértékegység / PL ▪ Jednostka / LT ▪ Vienetas / HR ▪ Jedinica / GR ▪ Μονάδα
EN ▪ Heat output / CZ ▪ Tepelný výkon / SK ▪ Tepelný výkon / HU ▪ Hőteljesítmény / PL ▪ Moc cieplna / LT ▪ Šiluminė galia / HR ▪ Toplinska snaga / GR ▪ Θερμική ισχύς				**EN ▪ Type of heat output / room temperature control (select one) / CZ ▪ Typ výdeje tepla / regulace teploty (vyberte jeden) / SK ▪ Druh ovládania tepelného výkonu / izbovej teploty (vyberte jeden) / HU ▪ A teljesítmény, illetve a beltéri hőmérséklet szabályozásának típusa (egyet kell megjelölni) / PL ▪ Rodzaj mocy cieplnej / regulacja temperatury w pomieszczeniu (należy wybrać jedną opcję) / LT ▪ Šiluminės galios lygiai / patalpos temperatūros reguliavimas (pasirinkti vieną) / HR ▪ Vrsta izlazne topline / regulacija sobne temperature (odabrati jednu) / GR ▪ Είδος θερμικής ισχύος / ρυθμιστή θερμοκρασίας δωματίου (να επιλε χθεί μια δυνατότητα)**	
EN ▪ Nominal heat output / CZ ▪ Jmenovitý tepelný výkon / SK ▪ Menovitý tepelný výkon / HU ▪ Névleges hőteljesítmény / PL ▪ Nominalna moc cieplna / LT ▪ Vardinė šiluminė galia / HR ▪ Nazivna toplinska snaga / GR ▪ Ονομαστική θερμική ισχύς	P_{nom}	2.000	kW	EN ▪ Single stage heat output and no room temperature control / CZ ▪ Jeden stupeň tepelného výkonu, bez regulace teploty v místnosti / SK ▪ Jednoúrovňový tepelný výkon bez ovládania izbovej teploty / HU ▪ Egyetlen állás, beltéri hőmérséklet-szabályozás nélkül / PL ▪ Jednostopniowa moc cieplna bez regulacji temperatury w pomieszczeniu / LT ▪ Vieno šiluminės galios lygio ir be patalpos temperatūros reguliavimo / HR ▪ Jednostupanjska predaja topline i bez regulacije sobne temperature / GR ▪ μονοβάθμια θερμική ισχύς και χωρίς ρυθμιστή θερμοκρασίας δωματίου	no / ne / nie / nem / nie / ne / ne / όχι
EN ▪ Minimum heat output (indicative) / CZ ▪ Minimální tepelný výkon (orientační) / SK ▪ Minimálny tepelný výkon (orientačne) / HU ▪ Minimális hőteljesítmény (indikatív) / PL ▪ Minimalna moc cieplna (orientacyjna) / LT ▪ Mažiausia šiluminė galia (orientacinė) / HR ▪ Minimalna toplinska snaga (referentna) / GR ▪ Ελάχιστη θερμική ισχύς (ενδεικτική)	P_{min}	1.200	kW	EN ▪ Two or more manual stages, no room temperature control / CZ ▪ Dva nebo více ručních stupňů, bez regulace teploty v místnosti / SK ▪ Dve alebo viac manuálnych úrovní bez ovládania izbovej teploty / HU ▪ Két vagy több kézi szabályozású állás, beltéri hőmérséklet-szabályozás nélkül / PL ▪ Co najmniej dwa ręczne stopnie bez regulacji temperatury w pomieszczeniu / LT ▪ Dviejų ar daugiau rankiniu būdu nustatomų šiluminės galios lygių be patalpos temperatūros reguliavimo / HR ▪ Dva ili više ručna stupnja, bez regulacije sobne temperature / GR ▪ δύο ή περισσότερες χειροκίνητες βαθμίδες χωρίς ρυθμιστή θερμοκρασίας δωματίου	no / ne / nie / nem / nie / ne / ne / όχι
EN ▪ Maximum continuous heat output / CZ ▪ Maximální trvalý tepelný výkon / SK ▪ Maximálny priebežný tepelný výkon / HU ▪ Maximális folyamatos hőteljesítmény / PL ▪ Maksymalna stała moc cieplna / LT ▪ Didžiausia nuolatinė šiluminė galia / HR ▪ Maksimalna kontinuirana toplinska snaga / GR ▪ Μέγιστη συνεχής θερμική ισχύς	$P_{max, c}$	2.000	kW	EN ▪ With mechanic thermostat room temperature control / CZ ▪ S mechanickým termostatem pro regulaci teploty v místnosti / SK ▪ S ovládaním izbovej teploty mechanickým termostatom / HU ▪ Mechanikus termosztátos beltéri hőmérséklet-szabályozás / PL ▪ Mechaniczna regulacja temperatury w pomieszczeniu za pomocą termostatu / LT ▪ Su mechaninio termostatinio patalpos temperatūros reguliavimo funkcija / HR ▪ S regulacijom sobne temperature mehaničkim termostatom / GR ▪ με μηχανικό θερμοστατικό ρυθμιστή θερμοκρασίας δωματίου	yes / ano / áno / igen / tak / taip / da / ναι
				EN ▪ With electronic room temperature control / CZ ▪ S elektronickou regulací teploty v místnosti / SK ▪ S elektronickým ovládaním izbovej teploty / HU ▪ Elektronikus beltéri hőmérséklet-szabályozás / PL ▪ Elektroniczna regulacja temperatury w pomieszczeniu / LT ▪ Su elektroninio patalpos temperatūros reguliavimo funkcija / HR ▪ S elektroničkom regulacijom sobne temperature / GR ▪ με ηλεκτρονικό ρυθμιστή θερμοκρασίας δωματίου	no / ne / nie / nem / nie / ne / ne / όχι
				EN ▪ Electronic room temperature control plus daytimer / CZ ▪ S elektronickou regulací teploty v místnosti a denním programem / SK ▪ Elektronické ovládanie izbovej teploty a denný časovač / HU ▪ Elektronikus beltéri hőmérséklet-szabályozás és napszak szerinti szabályozás / PL ▪ Elektroniczna regulacja temperatury w pomieszczeniu ze sterownikiem dobowym / LT ▪ Elektroninis patalpos temperatūros reguliavimas ir paros laikmatis / HR ▪ Elektronička regulacija sobne temperature i dnevni uklopni sat / GR ▪ με ηλεκτρονικό ρυθμιστή θερμοκρασίας δωματίου και χρονοδιακόπτη ημέρας	no / ne / nie / nem / nie / ne / ne / όχι

Copyright © 2025, Fast ČR, a.s.

EN ▪ Auxiliary electricity consumption / CZ ▪ Spotřeba pomocné elektrické energie / SK ▪ Vlastná spotreba elektrickej energie / HU ▪ Kiegészítő villamosenergia-fogyasztás / PL ▪ Zużycie energii elektrycznej na potrzeby własne / LT ▪ Pagalbinės elektros energijos vartojamoji galia / HR ▪ Potrošnja pomoćne električne energije / GR ▪ Βοηθητική κατανάλωση ηλεκτρικής ενέργειας				EN ▪ Electronic room temperature control plus week timer / CZ ▪ S elektronickou regulací teploty v místnosti a týdenním programem / SK ▪ Elektronické ovládanie izbovej teploty a týždenný časovač / HU ▪ Elektronikus beltéri hőmérséklet-szabályozás és heti szabá- lyozás / PL ▪ Elektroniczna regulacja temperatury w pomieszczeniu ze sterownikiem tygodniowym / LT ▪ Elektroninis patalpos temperatūros reguliavimas ir savaitės laikmatis / HR ▪ Elektronička regulacija sobne temperature i tjedni uklopni sat / GR ▪ Με ηλεκτρονικό ρυθμιστή θερμοκρασίας δωματίου και χρονοδιακόπτη εβδομάδας	no / ne / nie / nem / nie / ne / ne / όχι
EN ▪ At nominal heat output / CZ ▪ Při jmenovitém tepelném výkonu / SK ▪ Pri menovitom tepelnom výkone / HU ▪ A névleges hőteljesítményen / PL ▪ Przy nominalnej mocy cieplnej / LT ▪ Esant vardinei šiluminei galiai / HR ▪ Kod nazivne toplinske snage / GR ▪ Στην ονομαστική θερμική ισχύ	el_{max}	1.926	kW	**EN ▪ Other control options (multiple selections possible) / CZ ▪ Další možnosti regulace (lze vybrat více možností) / SK ▪ Ďalšie možnosti ovládania (možnosť viacnásobného výberu) / HU ▪ Más szabályozási lehetőségek (több is megjelölhető) / PL ▪ Inne opcje regulacji (można wybrać kilka) / LT ▪ Kitos valdymo pasirinktys (galimi keli variantai) / HR ▪ Druge mogućnosti regulacije (moguć odabir više opcija) / GR ▪ Άλλες δυνατότητες ρύθμισης (επιτρέπονται πολλές επιλογές)**		
EN ▪ At minimal heat output / CZ ▪ Při minimálním tepelném výkonu / SK ▪ Pri minimálnom tepelnom výkone / HU ▪ A minimális hőteljesítményen / PL ▪ Przy minimalnej mocy cieplnej / LT ▪ Esant mažiausiai šiluminei galiai / HR ▪ Kod minimalne toplinske snage / GR ▪ Στην ελάχιστη θερμική ισχύ	el_{min}	1.148	kW	EN ▪ Room temperature control, with presence detection / CZ ▪ Regulace teploty v místnosti s detekcí přítomnosti osob / SK ▪ Ovládanie izbovej teploty s detekciou prítomnosti / HU ▪ Beltéri hőmérséklet-szabályozás jelenlét-érzékeléssel / PL ▪ Regulacja temperatury w pomieszczeniu z wykrywaniem obecności / LT ▪ Patalpos temperatūros reguliavimas su žmonių buvimo atpažintimi / HR ▪ Regulacija sobne temperature s prepoznavanjem prisutnosti / GR ▪ ρυθμιστής θερμοκρασίας δωματίου με ανιχνευτή παρουσίας	no / ne / nie / nem / nie / ne / ne / όχι
EN ▪ In standby mode / CZ ▪ V pohotovostním režimu / SK ▪ V pohotovostnom režime / HU ▪ Készenléti üzemmódban / PL ▪ W trybie czuwania / LT ▪ Pristabdytaja veiksena / HR ▪ U stanju pripravnosti / GR ▪ σε κατάσταση αναμονής	el_{SB}	N/A	kW	EN ▪ Room temperature control, with open window detection / CZ ▪ Regulace teploty v místnosti s detekcí otevřeného okna / SK ▪ Ovládanie izbovej teploty s detekciou otvoreného okna / HU ▪ Beltéri hőmérséklet-szabályozás nyitottablak-érzékeléssel / PL ▪ Regulacja temperatury w pomieszczeniu z wykrywaniem otwartego okna / LT ▪ Patalpos temperatūros reguliavimas su atviro lango atpažintimi / HR ▪ Regulacija sobne temperature s prepoznavanjem otvorenog prozora / GR ▪ ρυθμιστής θερμοκρασίας δωματίου με ανιχνευτή ανοιχτού παραθύρου	no / ne / nie / nem / nie / ne / ne / όχι
				EN ▪ With distance control option / CZ ▪ S dálkovým ovládáním / SK ▪ S možnosťou diaľkového ovládania / HU ▪ Távszabályozási lehetőség / PL ▪ Z regulacją na odległość / LT ▪ Su nuotolinio valdymo pasirinktimi / HR ▪ S mogućnošću regulacije na daljinu / GR ▪ με δυνατότητα ρύθμισης εξ αποστάσεως	no / ne / nie / nem / nie / ne / ne / όχι
				EN ▪ With adaptive start control / CZ ▪ S adaptivně řízeným spouštěním / SK ▪ S prispôsobivým ovládaním spustenia / HU ▪ Adaptív bekapcsolásszabályozás / PL ▪ Z adaptacyjną regulacją startu / LT ▪ Su adaptyviuoju šildymo pradžios momento nustatymu / HR ▪ S prilagodljivim pokretanjem regulacije / GR ▪ με ρυθμιστή προσαρμοζόμενης εκκίνησης	no / ne / nie / nem / nie / ne / ne / όχι
				EN ▪ With working time limitation / CZ ▪ S omezením doby činnosti / SK ▪ S obmedzením času prevádzky / HU ▪ Működési idő korlátozása / PL ▪ Z ograniczeniem czasu pracy / LT ▪ Ribojamo veikimo laiko / HR ▪ S ograničenjem vremena rada / GR ▪ με περιορισμό διάρκειας λειτουργίας	no / ne / nie / nem / nie / ne / ne / όχι
EN ▪ Contact details / CZ ▪ Kontaktní údaje / SK ▪ Kontaktné údaje / HU ▪ Kapcsolatfelvételi adatok / PL ▪ Dane teleadresowe / LT ▪ Kontaktiniai duomenys / HR ▪ Podaci za kontakt / GR ▪ Στοιχεία επικοινωνίας FAST ČR, a.s., Černokostelecká 1621, 251 01 Říčany, Czechia				EN ▪ With black bulb sensor / CZ ▪ S černým kulovým čidlem / SK ▪ So snímačom čiernej žiarovky / HU ▪ Feketegömb-érzékelővel ellátva / PL ▪ Z czujnikiem ciepła promieniowania / LT ▪ Su spinduliavimo temperatūros jutikliu (angl. black bulb sensor) / HR ▪ S osjetnikom s crnom žaruljom / GR ▪ με αισθητήρα θερμομέτρου μελανής σφαίρας	no / ne / nie / nem / nie / ne / ne / όχι

FAST ČR, a.s.
U Sanitasu 1621
CZ-251 01 Říčany
www.sencor.eu